DRSNA BALKONSKA VRATA PSK/FIB / UDOBJE PASIV - PATIO 100/160 S

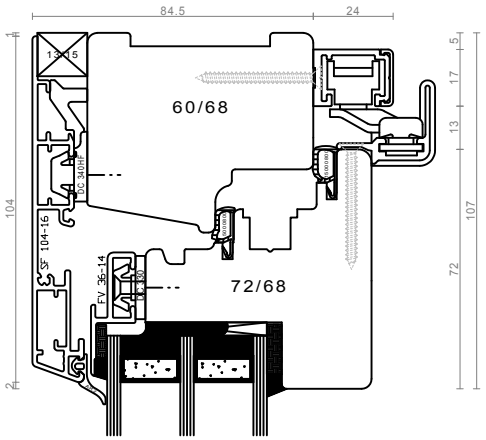

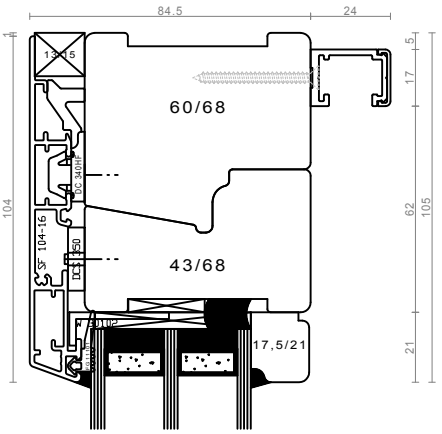

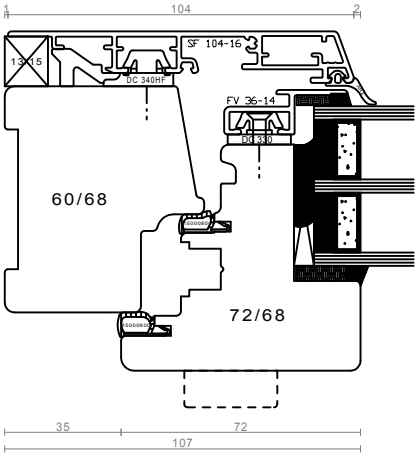

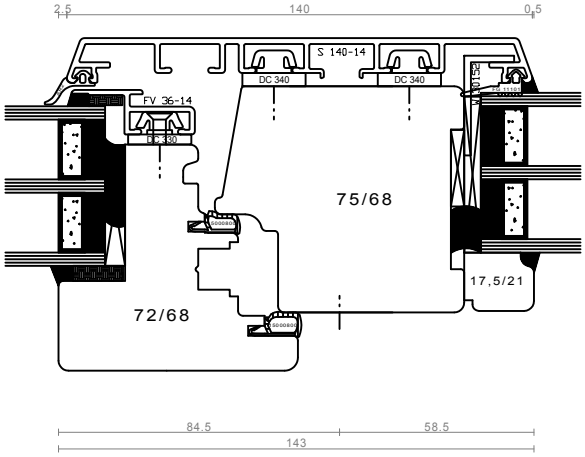

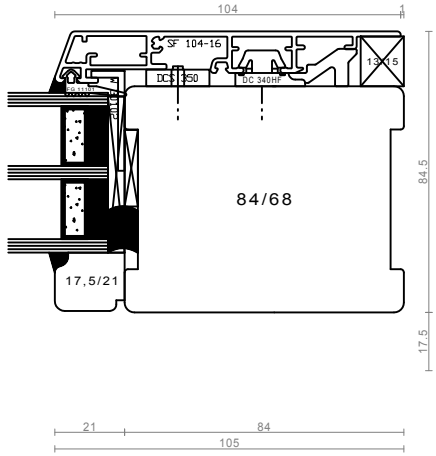

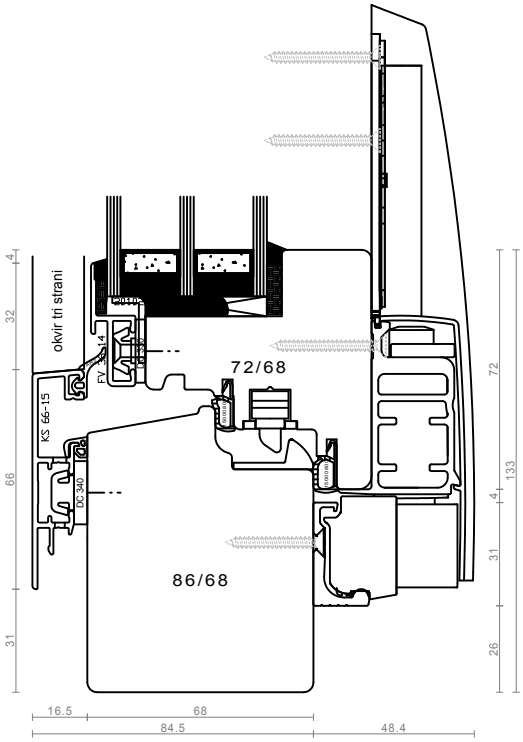

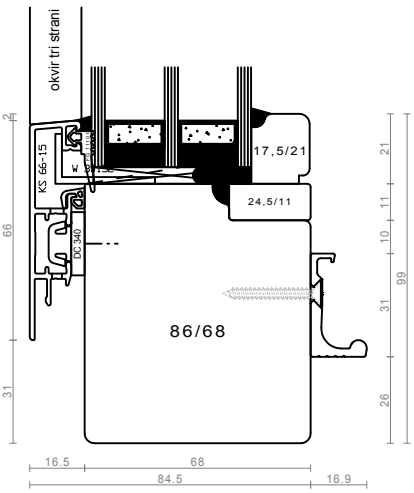

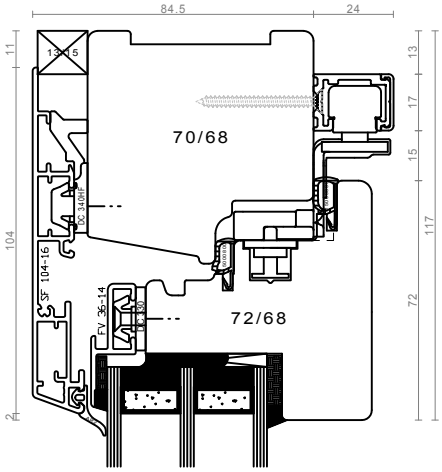
84.5
24
11
13
17
15
117
72
104
2
13/15
70/68
DC 340HF
SF 104-16
FV 36-14
DC 330
72/68

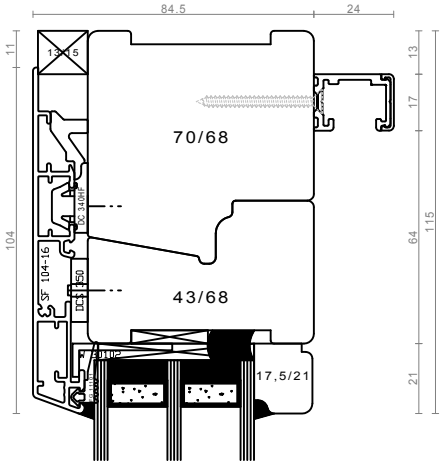
84.5
24
11
13
17
115
64
21
104
13/15
70/68
DC 340HF
SF 104-16
DCS 350
43/68
17,5/21

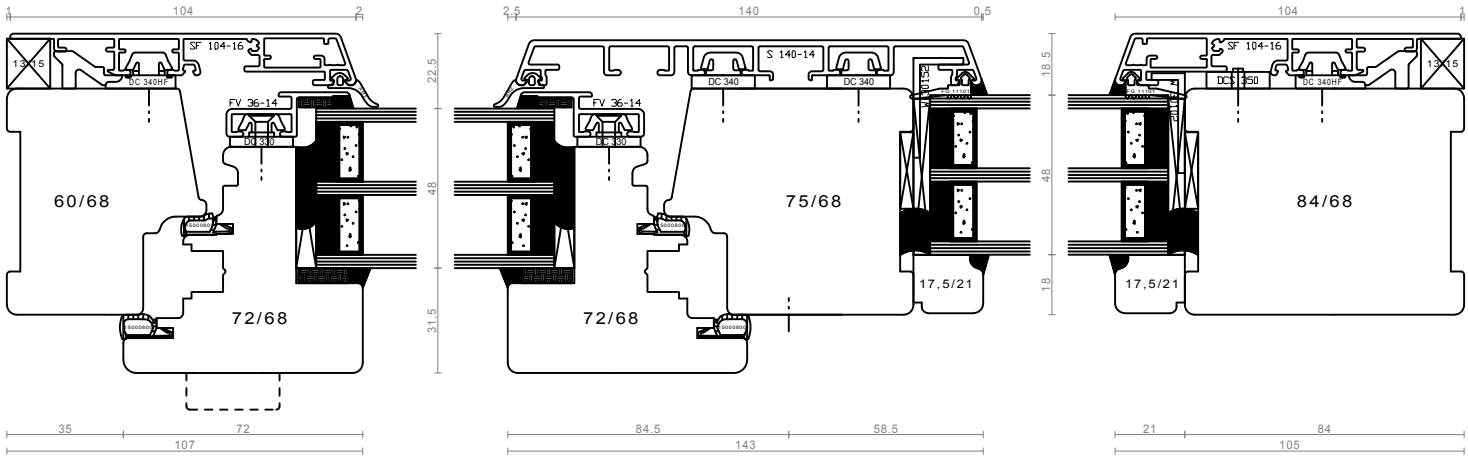
1
104
2
2.5
140
0.5
104
1
13/15
SF 104-16
DC 340HF
FV 36-14
DC 330
60/68
72/68
22.5
48
31.5
S 140-14
DC 340
DC 340
FV 36-14
DC 330
75/68
72/68
17,5/21
18.5
48
18
SF 104-16
DCS 350
DC 340HF
13/15
84/68
17,5/21
35
72
107
84.5
58.5
143
21
84
105

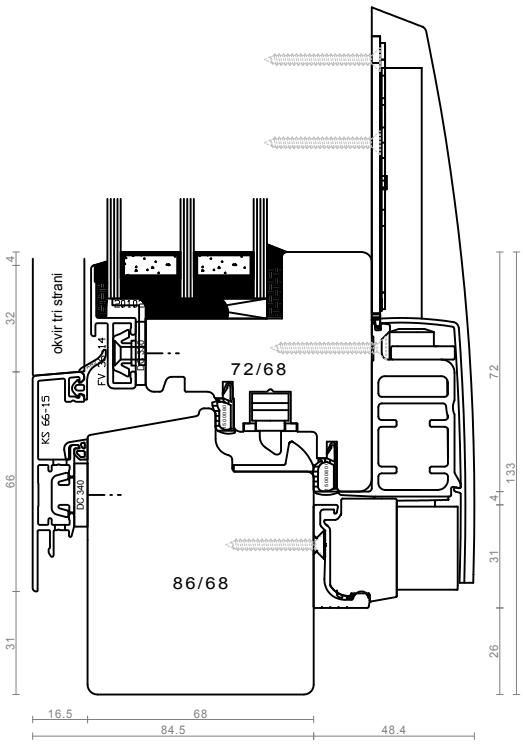
4
32
66
31
okvir tri strani
FV 36-14
DC 330
72/68
KS 66-15
DC 340
86/68
72
4
31
26
133
16.5
68
84.5
48.4

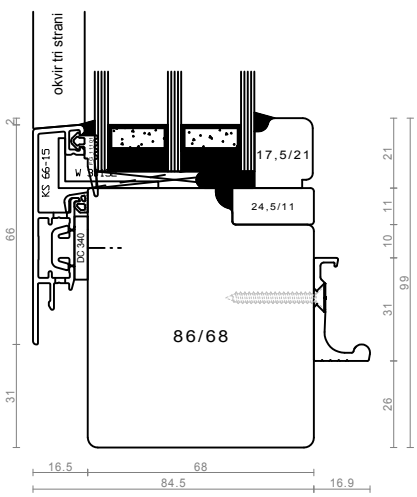
2
66
31
okvir tri strani
KS 66-15
DC 340
17,5/21
24,5/11
86/68
21
11
10
31
26
99
16.5
68
84.5
16.9